ISSN 2395-1621

Intelligent Irrigation System Using GSM

#1Megha Kumari, #2Hitendra Pathak, #3Muskan Sharma, #4Shubham Wani, #5Prof. J. P. Chavan

#1234Student, Dept. Of Computer Engineering,
#5Guide, Dept. Of Computer Engineering

SIT Lonavala, Maharashtra.

ABSTRACT

INDIA's major occupation is agriculture and it plays a vital role in the economy of India, where Irrigation plays an important role, which requires monitoring and lots of time is wasted in this, due to smart technologies yet aren't introduced and the one that are available are cost effective. So there is need of smart technology that is very easy to use and not much cost effective. The system in this paper is based on android app and uses GSM module to monitor and control the irrigation system. Overall the main aim of this paper is to provide an irrigation system thereby saving time, money & power of the farmer. The traditional farming-land irrigation techniques require manual work and man powers are required. With the help of latest technology of irrigation the man power can be minimized. The changes in temperature and the humidity of the surroundings are sensed by the sensors, the variation in the temperature and humidity and gives an interrupt signal to the micro-controller from which we can monitorize the overall system automatically

Keywords: Soil-moisture & temperature sensor, irrigation system, Arduino, GSM Module.

ARTICLE INFO

Article History

Received: 24th April 2018

Received in revised form :

24th April 2018

Accepted: 27th April 2018

Published online :

3rd May 2018

I. INTRODUCTION

This system is an attempt towards the smart irrigation system concept. An electronic device is responsible for sensing the temperature and Moisture conditions. Along with it GSM functionality is added to the hardware device. The sensed environmental conditions are taken and sent to the Server, which has a MySQL database for storage of records. The sensor nodes are then deployed in the irrigation field for sensing moisture value of soil and this sensed data is sent to controller node. On receiving sensor value the controller node checks it with required soil moisture value. When this moisture value is not upto the required level in irrigation field then the water valve is switched on by user. Smart irrigation systems estimate and measure diminution of existing plant moisture in order to operate an irrigation system, restoring water as needed while minimizing excess water use. The effects of the applied amount of irrigation water, irrigation frequency and water use are particularly important. To improve water efficiency there must be a proper irrigation scheduling strategy. For continuously increasing demand of food necessities, it's important to rapid improvement in production of food technology. Agriculture is only the source to provide this. This is the important factor in human societies to get a growth and dynamic demand in food production. Agriculture plays an important role in economy and development. Agriculture plays the important role in the economy and development of India. Due to lack of water and scarcity of land water resulting into decrease in volume of water on earth, and thus farmers prefer irrigation. In agriculture, there is two things is very important, first to get information of about fertility of soil and second is to measure moisture content in soil. Nowadays for irrigation different Techniques are available which are used to reduce the dependency of rain. And mostly this technique is driven from electrical power and on/off switching. There is also more technique available which are based on climate data and are irrigated with smart controller and using microclimate data to schedule irrigation water. Also irrigation is real time application. These technique, irrigate using following techniques.

- Internet based Monitoring using Servers, android etc. having different approaches.

- Monitoring using Wireless Sensor Networks.
- Wireless Monitoring using Bluetooth, Arduino.
- Applications have varied widely like Home Automation, Security Systems, Bio-medical applications, Agriculture, Environment, Reservoir, Bridge health monitoring, etc.

II. LITERATURE SURVEY

Smart Agriculture helps to reduce wastage, effective usage of fertilizer and thereby increase the crop yield. In this paper, soil moisture and temperature sensors were placed in root zone of plants and gateway unit. It handles the sensor information and transmit data to a web application. One algorithm was developed for measuring threshold values of temperature and soil moisture sensor that was programmed into a microcontroller to control water quantity. Photovoltaic panel is used. Another factor that is cellular-Internet interface is used that allows data inspection and irrigation scheduling which is implemented using an android application. The automatic system was tested for several days and result showed that it saves ninety percent of water required for farming as compared with traditional irrigation system. Three replicas of the automated system was successfully implemented in other places for several couple of months. Because of its energy autonomy and low cost, the system has the potential to prove itself greatly useful in water limited geographically isolated area.

Acoustic based technique was developed to detect soil moisture content. The main purpose of this technique is to develop measurement of soil moisture in real time method. The technique is based on relationship between two quantities that are, speed of sound and the degree of saturation with water in soil. This paper design is a model of automatic irrigation system which is based on microcontroller and solar power that was used only as a source of power supply. Various sensors are placed in paddy field. Different sensors sense water level continuously and give the information to the farmer through mobile phone. Farmer can control the motor using mobile phone from remote location.

If the water level reaches its threshold value, motor automatically powers off. The automatic system designed using ARM and GSM technology. Soil moisture sensor placed in root zone in paddy field that senses water level. The system set up is based on ARM7TDMI core and GSM. System communicates via GSM. GSM operates through SMS and is a link between ARM processor and centralized unit. This system detects climate and field condition as a real time. This information is sent to user in the form of SMS and GSM modem is controlled using AT (Attention) commands. These commands control majority of the functions of GSM model.

In this paper, automatic irrigation technique is implemented using WSN (Zig-bee and internet technology). The idea was developed to improve irrigation system and reduce the cost of water. Sensors are placed in farm that sense continuously and collect the information. This information stored using centralized monitoring and also passed to data collection interface and then transmits it to the wireless sensing node. Using this information, system was control automatically using internet.

III. PROPOSED SYSTEM

The main motivation and overall structure of this proposed system is to solve the problem of irrigation and every sector of agriculture field by using latest technology and to show correct values of sensors on android app by using app user can ON/OFF node. The sensors capture and provide values to the Arduino which in turn stores the values to Database. All the activities in the farm field are notified to user with help of internet.

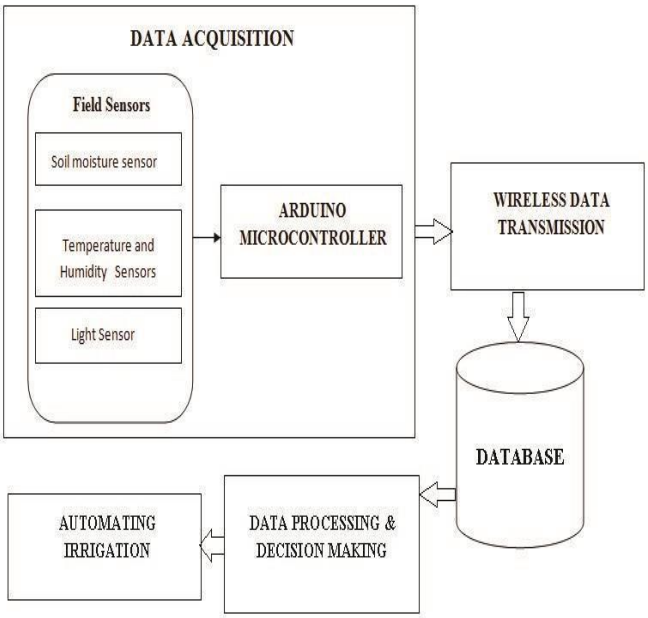

IV. OVERALL ANALYSIS

An automatic irrigation system used for irrigate sage crop field for several days that saves more then eighty five to eighty eight percent of water as compare to traditional irrigation system using WSN and GPRS system(1). The BRUTSAERT's model is used to measure the moisture level of soil as an accurate, on site, real-time method that also derives the speed-moisture curves, the conditions for the actual validity of the curves, and the suitable sound frequency to perform the measurements, for a wide range of agricultural soil in different physical conditions [3].

Automatic irrigation system works using mobile phone. It also uses solar power as a power source [7]. Arm is also used to monitor the irrigation system as a real time system for irrigation, system is implemented using GPRS system [8]. Automatic irrigation system is controlled using Zigbee and IOT [9]. GPRS techniques faces disadvantage viz speed, distance factor, reliability, hence GPRS is discarded from the project.

Analysis of Water:

After the detailed analysis of implemented irrigation system and other environmental conditions, water requirement per acre can be calculated as below:

Irrigation factor = 0.55
Evaporation rate = 0.4
Irrigation interval = 1 day
Diameter of drip outlet = 3mm Thus,

Water=(irrigation factor)*(daily evaporation)*(irrigation interval)*(diameter of drip)*10/2.54*0.001 required
= 0.55*0.4*1*10*3/2.54
= 10.39 Cubic-meter/Acre

Water holding capacity for medium grade soil = 189 lit/24 hr.

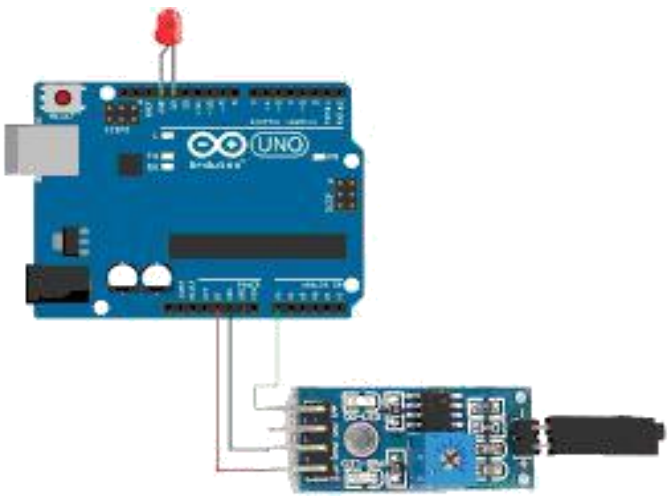

Fig -: Soil Moisture Sensor

Most of the soil moisture sensors are designed to estimate soil volumetric water content that works on the dielectric constant (soil bulk permittivity) of that soil. The dielectric constant is defined as the soil's ability to transmit electricity. The dielectric constant of soil increases with the increase in water content of the soil. This is due to the fact that the dielectric constant of water is much larger than that of the other soil components actually have, including air. Thus, measurement of the dielectric constant gives a predictable estimation of water content.

The threshold value is set by the user. Another control technique along with the SMS is “on-demand” where the controller starts irrigation at a low threshold value and terminates irrigation at a high threshold value.

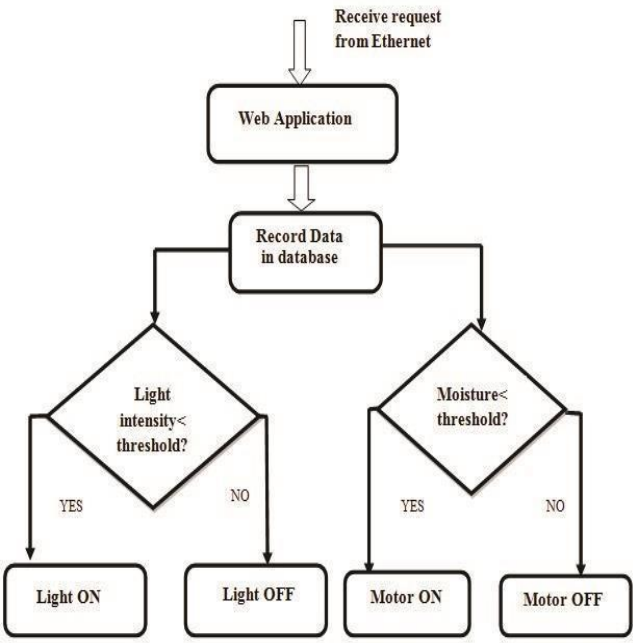

Fig-: Shows the relay connections with the arduino board and the switch.

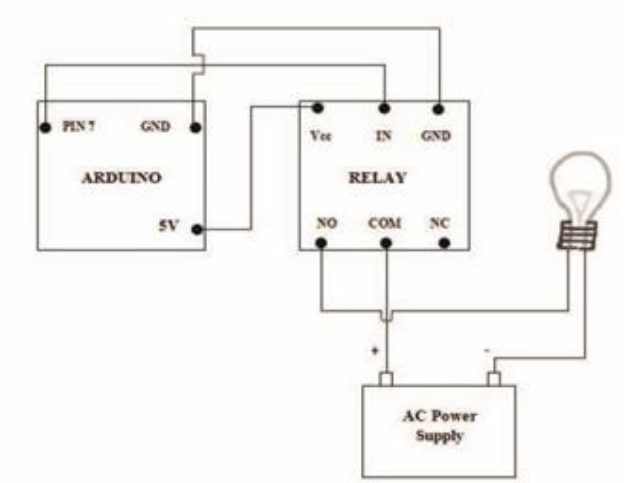

Fig-: Connection of Relay with Arduino and AC Power.

V. CONCLUSION

Thus system provides both humidity and moisture values that are captured using sensors. If the value is lesser than threshold, it will notify to water the plant, Along with this blue tooth functionality is added to the hardware device. The sensed environmental conditions are taken and sent to the Server, which has the Mysql database for storage of records.

ACKNOWLEDGMENTS

Lots of efforts have been taken in this project. However, it would not have been possible without the kind support and help of many individuals and organizations. I would like to extend my sincere thanks to all of them. I am highly

indebted to Prof. M.S.Chaudhari Sir for their guidance and constant supervision. I would also like to thanks for providing upto date information with regards to the project & also for their support in completing the project. I would like to express my gratitude towards my parents & member of SIT Lonavala for their kind co-operation and encouragement that helped me a lot in completion of my project. I would like to express my special gratitude and thanks to the industry person for giving me such attention and time. My appreciations also goes to my colleague in developing the project and people who have willingly helped me out with their abilities.

REFERENCES

[1] IOT Based Crop-Field Monitoring And Irrigation Automation by rajalaxmi P department of CSE,tamilnadu.[2016]

[2] Remote Sensing a nd Control of a n Irrigation System U s i n g a D i s t r i but e d Wi r e l e s s Se n s o r Ne t wo r k Yu n s e o p (J a m e s) K i m , Member, IEEE, Robert G. Evans, and William M. IversenSmart.

[3]Irrigation system http://iosrjournals.org/iosr-jece/papers/Vol.%2010%20Issue%203/Version-2/F010323236.pdf

[4] This smart irrigation and water management system is controlled by your smartphone http://www.treehugger.com/ gadgets/smart-irrigation-and-water-management-system-controlled- app.html

[5] Sensor based Automated Irrigation System with IOT: A Technical Review Karan Kansara1, Vishal Zaveri1, Shreyans Shah1, Sandip Delwadkar2, Kaushal Jani.

[6] AUTOMATIC IRRIGATION SYSTEM BASED ON RF MODULE Ms. Deweshvree Rane PG Scholar - VLSI, Sevagram, Wardha, India Prof. P. R. Indurkar Professor, BDCE, Sevagram, Sevagram, Wardha, India Prof. D. M. Khatri Assistant Professor, BDCE, Sevagram, Sevagram, Wardha, India.

[7] A STUDY ON DEVELOPING A SMART ENVIRONMENT IN AGRICULTURAL IRRIGATION TECHNIQUE Angel C and Asha S School of Computing Science and Engineering, VIT University, Chennai, Tamil Nadu

[8] This smart irrigation system http://www.treehugger.com/ gadgets/smart-irrigation-and-water-management-system-controlled-app.html Soil moisture information https://en.wikipedia.org/ wiki/Soil_moisture_sensor.

